RE 10 ∅10 mm, Precious Metal Brushes, 0.75 Watt, CE approved

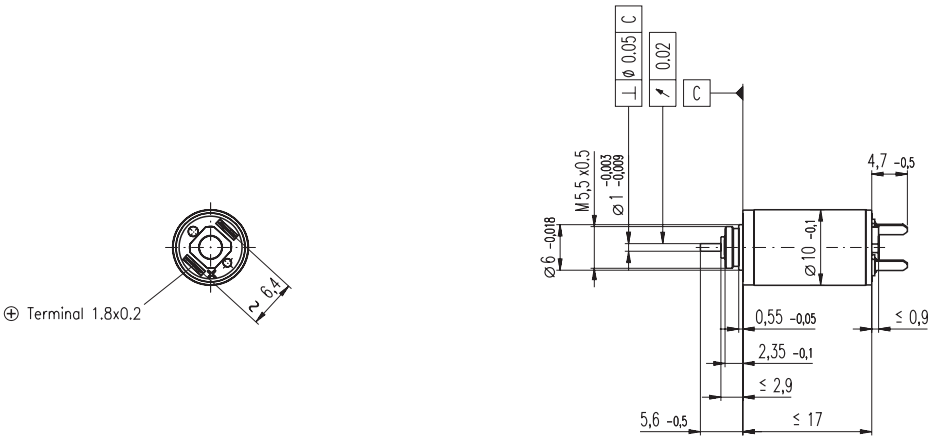

M 1:1

Stock program
Standard program
Special program (on request)

Order Number

			118382	118383	118384	118385	118386	118387	118388	118389	118390	118391
Motor Data												
	Values at nominal voltage											
1	Nominal voltage	V	2.4	3.0	3.6	4.5	6.0	6.0	7.2	7.2	9.0	12.0
2	No load speed	rpm	10300	10400	9930	11300	13000	11400	11700	10600	10700	11600
3	No load current	mA	16.0	12.8	10.1	9.51	8.5	7.18	6.21	5.46	4.44	3.68
4	Nominal speed	rpm	1630	1990	1500	2950	4670	3150	3340	2300	2000	2790
5	Nominal torque (max. continuous torque)	mNm	0.757	0.789	0.784	0.787	0.784	0.800	0.784	0.718	0.757	0.746
6	Nominal current (max. continuous current)	A	0.367	0.306	0.243	0.222	0.190	0.170	0.143	0.119	0.101	0.081
7	Stall torque	mNm	0.924	1.00	0.949	1.09	1.25	1.13	1.12	0.944	0.957	1.01
8	Starting current	A	0.432	0.375	0.284	0.297	0.292	0.232	0.198	0.150	0.123	0.106
9	Max. efficiency	%	66	67	66	68	69	68	68	66	66	67
	Characteristics											
10	Terminal resistance	Ω	5.55	8.00	12.7	15.2	20.6	25.8	36.4	47.9	72.9	114
11	Terminal inductance	mH	0.0461	0.0720	0.112	0.136	0.184	0.240	0.325	0.398	0.605	0.920
12	Torque constant	mNm / A	2.14	2.67	3.34	3.67	4.27	4.87	5.68	6.28	7.75	9.55
13	Speed constant	rpm / V	4470	3570	2860	2600	2230	1960	1680	1520	1230	1000
14	Speed / torque gradient	rpm / mNm	11600	10700	10800	10700	10700	10400	10800	11600	11600	11900
15	Mechanical time constant	ms	7.97	7.92	7.95	7.90	7.90	7.85	7.93	8.04	8.04	8.11
16	Rotor inertia	gcm²	0.0656	0.0707	0.0700	0.0702	0.0702	0.0722	0.0701	0.0662	0.0662	0.0651

Specifications

	Thermal data	
17	Thermal resistance housing-ambient	45.5 K / W
18	Thermal resistance winding-housing	19.5 K / W
19	Thermal time constant winding	3.14 s
20	Thermal time constant motor	108 s
21	Ambient temperature	-20 ... +65°C
22	Max. permissible winding temperature	+85°C
	Mechanical data (sleeve bearings)	
23	Max. permissible speed	19000 rpm
24	Axial play	0.05 - 0.15 mm
25	Radial play	0.012 mm
26	Max. axial load (dynamic)	0.15 N
27	Max. force for press fits (static)	15 N
28	Max. radial loading, 4 mm from flange	0.4 N
	Other specifications	
29	Number of pole pairs	1
30	Number of commutator segments	7
31	Weight of motor	7 g

Values listed in the table are nominal.
Explanation of the figures on page 47.

Operating Range

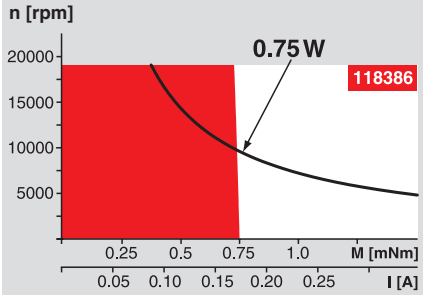

Comments

Continuous operation
In observation of above listed thermal resistance (lines 17 and 18) the maximum permissible winding temperature will be reached during continuous operation at 25°C ambient.
= Thermal limit.

Short term operation
The motor may be briefly overloaded (recurring).

Assigned power rating

maxon Modular System

Overview on page 16 - 21

Planetary Gearhead
∅10 mm
0.005 - 0.1 Nm
Page 206

Planetary Gearhead
∅10 mm
0.01 - 0.15 Nm
Page 207

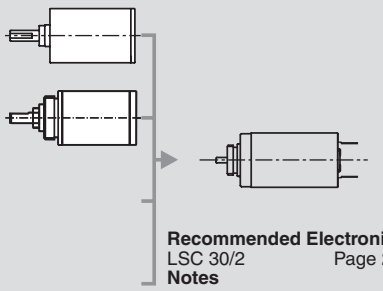

Recommended Electronics:
LSC 30/2 Page 268
Notes **18**